SALES

Level	Zone	ECI Nº.	Revision note	Date	Designed	Checked
R02	02	26600	Bemaßung hinzugefügt, Bezeichnung geändert measurements added, designation changed	2025/05/26	Leiding. S	Nagl B

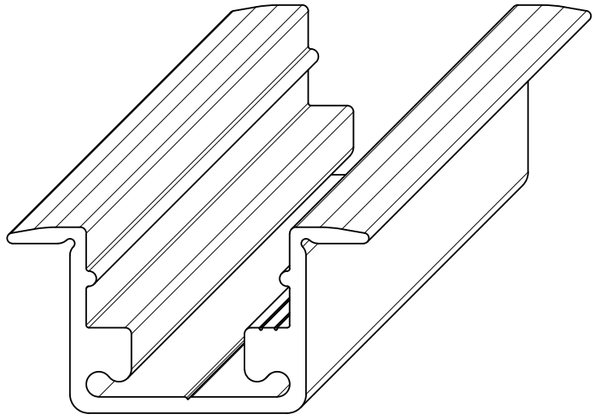

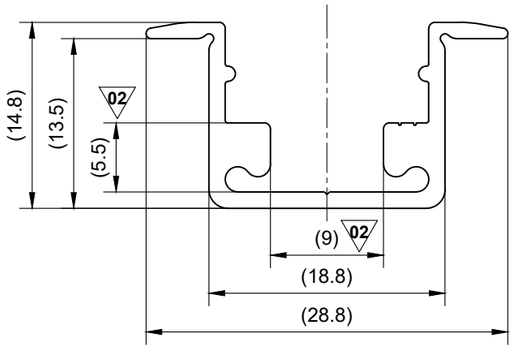

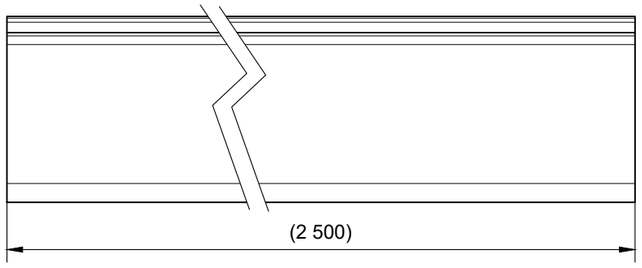

Material / *materials*:
Aluminium grau aluminium grey

CP_03-0_Bemaßungsrichtlinie ( ) Auxiliary dimension DIN 406-10 ▭ Theoretical dimension ISO 1101

⬭ Test dimension (SPC) [ ] Unfinished dimension DIN 406-10 √ Surface quality ISO 1302

Designed by	Checked by	Approved by	
Leidinger Sabine 2025/05/07	Wetzlmaier Gerlinde 2025/05/09	Schamberger Stefan 2025/05/14	ASPÖCK Design Engineering APPROVED

14-4230-787

ASPÖCK SYSTEMS

Designation Alu Profile–Medium FS grey 2,5m 02

Project number 0704

Drawing Nr. 14423078

Business Unit SALES - 12

Tolerance CP_04-2_Toleranzen Verkabelungsprodukte

Weight -

Scale not in scale

Dimensions in mm

Part Number

Transmittal, reproduction, dissemination and/or editing of this document as well as utilization of its contents and communication there of to others without express authorization are prohibited. Offenders will be held liable for payment of damages. All rights created by patent grant or registration of a utility model or design patent are reserved.

Level R02

Sheet 1 / 1